CITY OF ANTIGO

CITY PLAN COMMISSION MEETING

MULTI-PURPOSE ROOM	**Tuesday, September 05, 2023**
CITY HALL, 700 EDISON STREET	**6:00 PM**

Call to Order

Public Hearings

1. Public Hearing for Conditional Use Application Under the Provisions of Ordinance No. 1095B, Section 14-227 (4) (b), the Municipal Code at 225 E Fifth Avenue for the Purpose of Allowing Aspirus Langlade's Maintenance Department More Storage Space Where Everything can be Housed in One Spot (Parcel #201-1957)
2. Public Hearing for Zoning Amendment Application for 722 Seventh Avenue to Classify Portion of Property as B-4, Central Business District Instead of R-4, General Residence District to Rezone a Portion of Parcel #201-0764 to Allow Combination with Adjoining Property for Expansion of the Covantage Credit Union Lot for a Generator Location with the Rest of the Lot Remaining Residential
3. Public Hearing for Zoning Amendment Application for Parcel #201-2801.073 (property address null) by the Waste Water Treatment Plant to Classify Property as I-2, General Industrial District Instead of R-1, Single-Family Residence District to Allow for Solar Field to Help Power Waste Water Treatment Plant

Discussion and Action May Occur on Any of the Following Agenda Items:

1. Minutes from August 1, 2023 Meeting
2. Conditional Use Application Under the Provisions of Ordinance No. 1095B, Section 14-227 (4) (b), the Municipal Code for 225 E Fifth Avenue for the Purpose of Allowing Aspirus Langlade's Maintenance Department More Storage Space Due to the Increasing Size of the Facility with the Goal to have a Nice Looking Building Where Everything can be Housed in One Spot (Parcel #201-1957)
3. Zoning Amendment Application Request to Amend Ordinance No. 1095B, the Municipal Code of the City of Antigo, so as to Classify a Portion of the Property at 722 Seventh Avenue (Parcel #201-0764) as B-4, Central Business District Instead of R-4, General Residence District to Allow Combination with Adjoining Property for Expansion of the Covantage Credit Union Lot for a Generator Location with the Rest of the Lot Remaining Residential
4. Zoning Amendment Application Request to Amend Ordinance No. 1095B, the Municipal Code of the City of Antigo, so as to Classify Parcel #201-2801.073 (property address null) as I-2, General Industrial District Instead of R-1, Single-Family Residence District to Allow for Solar Field to Help Power the Waste Water Treatment Plant
5. Approve Sale of Vacant Lot Located at 711 Watson Street

Any Other Matters Authorized by Law to be Considered

Adjournment

Upon reasonable notice, efforts will be made to accommodate disabled individuals through appropriate aids and services. For additional information, contact Cheryl Barta, 700 Edison Street, Antigo, Wisconsin 54409. (715) 623-3633 extension 100. Members of and possibly a quorum of members of other governmental bodies may be in attendance to gather information. Any governmental body other than that specifically referred to above will take no action.

DATE MAILED: August 30,2023 TERENCE BRAND

Antigo
"Antigo Area on the go"

NOTICE

NOTICE IS HEREBY GIVEN, that the following application for a Conditional Use Permit under the provisions of Ordinance No. 1095B, Section 14-227 (4) (b), the Municipal Code, has been filed:

"East Fifth Avenue Addition E ½ of Lot 10 and All Lot 11 Block 2
Parcel #201-1957 (225 E Fifth Avenue)"

to allow Aspirus Langlade's maintenance department more storage space due to the increasing size of the facility with the goal to have a nice looking building where everything can be housed in one spot.

FURTHER, that a public hearing will be held on the above application before the City Plan Commission of the City of Antigo on Tuesday, September 5, 2023, at 6:00 p.m. in the Multipurpose Room, City Hall, 700 Edison Street, Antigo, Wisconsin, at which time opportunity to be heard will be given all interested persons.

Kaye M. Matucheski
City Clerk-Treasurer/Finance Director

City of Antigo, 700 Edison Street, Antigo, Wisconsin 54409-1955
The City of Antigo is an Equal Opportunity Provider
Phone (715) 623-3633 Fax (715) 627-7099
www.antigo-city.org

Attachment: Public Hearing Notice for 225 E 5th Ave Conditional Use (6338 : Public Hearing for 225 E 5th Ave Conditional Use)

Antigo
"Antigo Area on the go"

NOTICE

NOTICE IS HEREBY GIVEN, that it has been proposed to amend Ordinance No. 1095B, the Municipal Code of the City of Antigo, so as to classify the following described property as B-4, Central Business District instead of R-4, General Residence District:

> "The North 48 ft of Lots 15 and 16 of Block 54 of the Original Plat of the City of Antigo" Parcel #201-0764 (722 Seventh Avenue)

to rezone a portion of Parcel #201-0764 to allow combination with adjoining property for expansion of the Covantage Credit Union lot for a generator location with the rest of the lot remaining residential.

FURTHER, that a public hearing will be held on the proposed amendment before the City Plan Commission of the City of Antigo on Tuesday, September 5, 2023, at 6:00 p.m. in the Council Chambers, City Hall, 700 Edison Street, at which time opportunity to be heard will be given all interested persons.

Kaye M. Matucheski
City Clerk-Treasurer/Finance Director

City of Antigo, 700 Edison Street, Antigo, Wisconsin 54409-1955
The City of Antigo is an Equal Opportunity Provider
Phone (715) 623-3633 Fax (715) 627-7099
www.antigo-city.org

Attachment: Public Hearing Notice for 722 7th Ave Zoning Amendment Application (6340 : Public Hearing for 722 Seventh Ave Zoning

Antigo
"Antigo Area on the go"

NOTICE

NOTICE IS HEREBY GIVEN, that it has been proposed to amend Ordinance No. 1095B, the Municipal Code of the City of Antigo, so as to classify the following described property as I-2, General Industrial District instead of R-1, Single-Family Residence District:

> "PT GOVT Lot 6 Sec 4 T30N R11E Being the S20 Acres Thereof Exc S20' of W20' Thereof (#300626) (Old Sewer Plant Land) Also PT GOVT Lot 7 Sec 4 T30N R11E Com @ NE Cor TH S165' W265' S to Ctr of Springbrook TH Nw'rly Alg Springbrook to N Ln SD GOVT Lot TH E On N Ln SD GOVT Lot to POB" Parcel #201-2801.073 (property address null)

to allow for solar field to help power Waste Water Treatment Plant.

FURTHER, that a public hearing will be held on the proposed amendment before the City Plan Commission of the City of Antigo on Tuesday, September 5, 2023, at 6:00 p.m. in the Council Chambers, City Hall, 700 Edison Street, at which time opportunity to be heard will be given all interested persons.

Kaye M. Matucheski
City Clerk-Treasurer/Finance Director

City of Antigo, 700 Edison Street, Antigo, Wisconsin 54409-1955
The City of Antigo is an Equal Opportunity Provider
Phone (715) 623-3633 Fax (715) 627-7099
www.antigo-city.org

Attachment: Public Hearing Notice for Solar Field by Waste Water Treatment Plant for City Plan 9-5-2023 (6342 : Public Hearing for Zoning

APPLICATION FOR CONDITIONAL USE HEARING

CITY OF ANTIGO BUILDING INSPECTOR AND ZONING ADMINISTRATOR
700 EDISON STREET, ANTIGO, WISCONSIN 54409
PHONE: 715.623.3633 x134 Fax 715.627.7099
rmusolff@antigo-city.org

ALL INFORMATION MUST BE PRINTED AND LEGIBLE

Pd 8/9/23 FEE $ 100.00 DATE OF APPLICATION: 8/8/2023

APPLICANT NAME (S): Langlade Hospital Dieu of St. Joseph of Antigo (Aspirus Langlade Hospital)

ADDRESS: 112 E. 5th Ave.

CITY: Antigo STATE WI. ZIP 54409

PHONE: 715-623-2331 EMAIL: jason.noskowiak@aspirus.org

PROPERTY ADDRESS: 225 E. 5th Ave. **PARCEL NUMBER:** 2011957

LEGAL DESCRIPTION: East Fifth Avenue Addition E 1/2 Lot 10 and All Lot 11 Block 2

APPLICANT REQUEST FOR CONDITIONAL USE OF ORDINANCE NUMBER: Sec 14-227(4)(b)

FOR THE PURPOSE OF: Aspirus Langlade's maintenance department requires more storage space due to the increasing size of our facility. Our goal is to have a nice looking building where we can house everything in one spot.

It is understood that a Public Hearing will be held before a request for the above Conditional Use is, or is not approved. Applicant will be notified of the date and place of the Public Hearing.

APPLICANT SIGNATURE: Jason Noskowiak

FOR OFFICE USE ONLY BELOW THIS LINE

ADJACENT PROPERTY OWNERS WITHIN 100 FEET

ACTION OF THE CITY PLANNING COMMISSION: ____ **APPROVED** ____ **DENIED**

CITY PLAN COMMISSION RECOMMENDATION TO CITY COUNCIL:

SIGNATURE OF CHAIRPERSON OF CITY PLAN COMMISSION

DATE

Attachment: Conditional Use Application for 225 E 5th Ave (6339 : Conditional Use Application for 225 E Fifth Ave)

Antigo
"Antigo Area on the go"
BUILDING INSPECTOR/ZONING ADMINISTRATOR
715-623-3633 ext134
FAX 715-627-7099

Memo

To: City Plan Commission

From: Beth McCarthy, Building Inspector/Zoning Administrator

Date: 9/8/23

RE: To allow a new commerical building, to be used as a shop/maintenance building for Aspirus Health, located on at 225 E 5th Ave.

This is for your information:

- 225 E 5th Ave is zoned R-3
- Per Sec 14-227 Conditional uses.,(4)(b) hospitals are allowed in R-3 zoning with a conditional use permit.
- Attached is a site plan and building plan for your review.

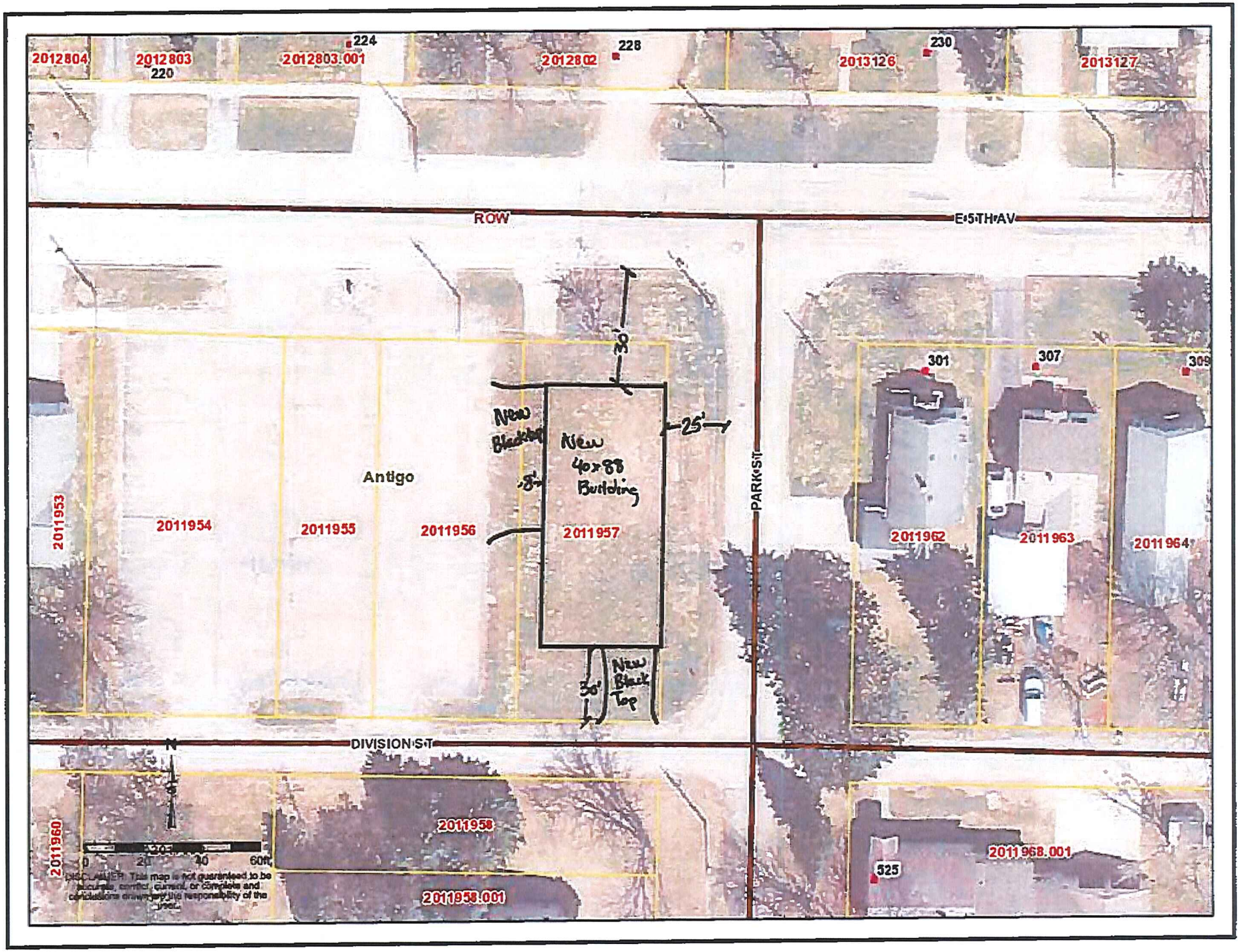
2012804
2012803
220
224
2012803.001
2012802
228
2013126
230
2013127
ROW
E 5TH AV
30'
New Blacktop
New 40x88 Building
25'
8'
Antigo
2011953
2011954
2011955
2011956
2011957
PARK ST
301
307
309
2011962
2011963
2011964
30'
New Black Top
DIVISION ST
N
2011960
2011958
2011958.001
525
2011968.001
0 20 40 60ft
DISCLAIMER: This map is not guaranteed to be accurate, correct, current, or complete and calculations are the responsibility of the user.

PINNO BUILDINGS

SHOW NORTH

SALES REP: Pete

DATE: 7/26/23

CLASSIFICATION OF BUILDING:

SHOP BUILDING AG & STORAGE ____ COMMERCIAL* X LEAN ____ EQUINE ____ OTHER ____

*NOTE: REQUIRES COMMERCIAL BUILDING SUBMITTAL INFORMATION

CUSTOMER NAME: Aspirus Langlade Hospital

SITE LOCATION / COUNTY: Antigo, WI / Langlade

BUILDING SIZE: 40' x 88' x 12'

TRUSS SPACING / TYPE: 8' o.c. / STD.

SNOW LOAD: 50 PSF

HEEL SIZE: BLDG 50'+ (VERIFY) 12"

PURLINS: SPACING: 20"

TYPE: STD. [X] NESTED [ ]

A = BUILDING / CLEARANCE HEIGHT 12'

B = OVERHEAD FRAME OUT BOTTOM ELEVATION 100'

C = OVERHEAD FRAME OUT HEIGHT 10'

D = ACTUAL HEADROOM AVAILABLE 2' +/-

HEADROOM REQUIRED TO TURN THE DOOR MUST BE LESS THAN THE ACTUAL HEADROOM AVAILABLE

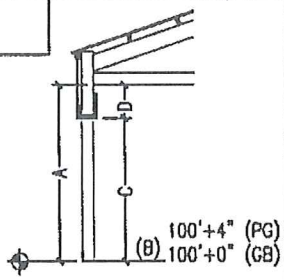

CHECK ONE:

POST IN GROUND [ ]	SLAB / GRADE BEAM [X]
FROST WALL [ ]	CONCRETE WALL [ ] EXPOSED HGT. ___ FT. OVERALL HGT. ___ FT.
OVERHANGS EAVES: 24" GABLES: 24"	WAINSCOTING YES [ ] NO [X] NOTES:
GUTTERS: YES [X] NO [ ]	SNOW BLOCKS: YES [X] NO [ ]

1. SHOW ALL DOOR AND WINDOW LOCATIONS
2. SHOW ANY PARTITION WALLS

West side only

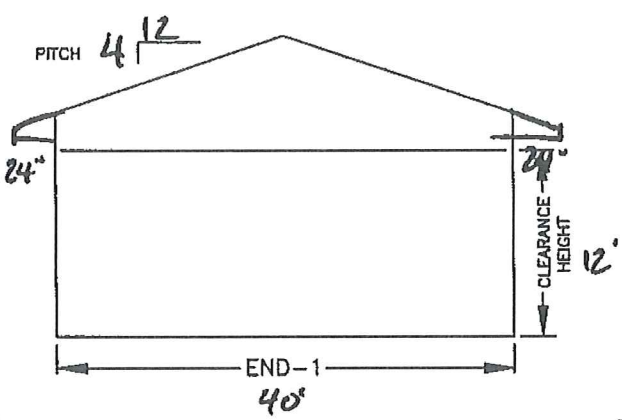

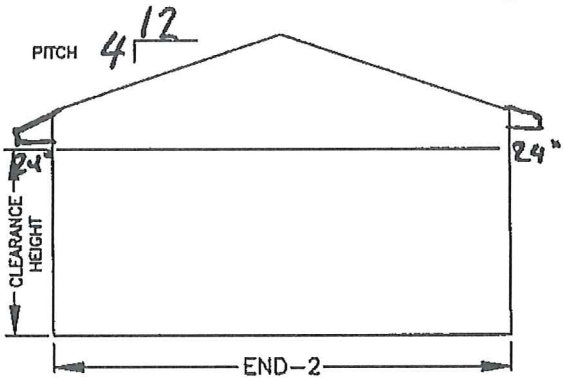

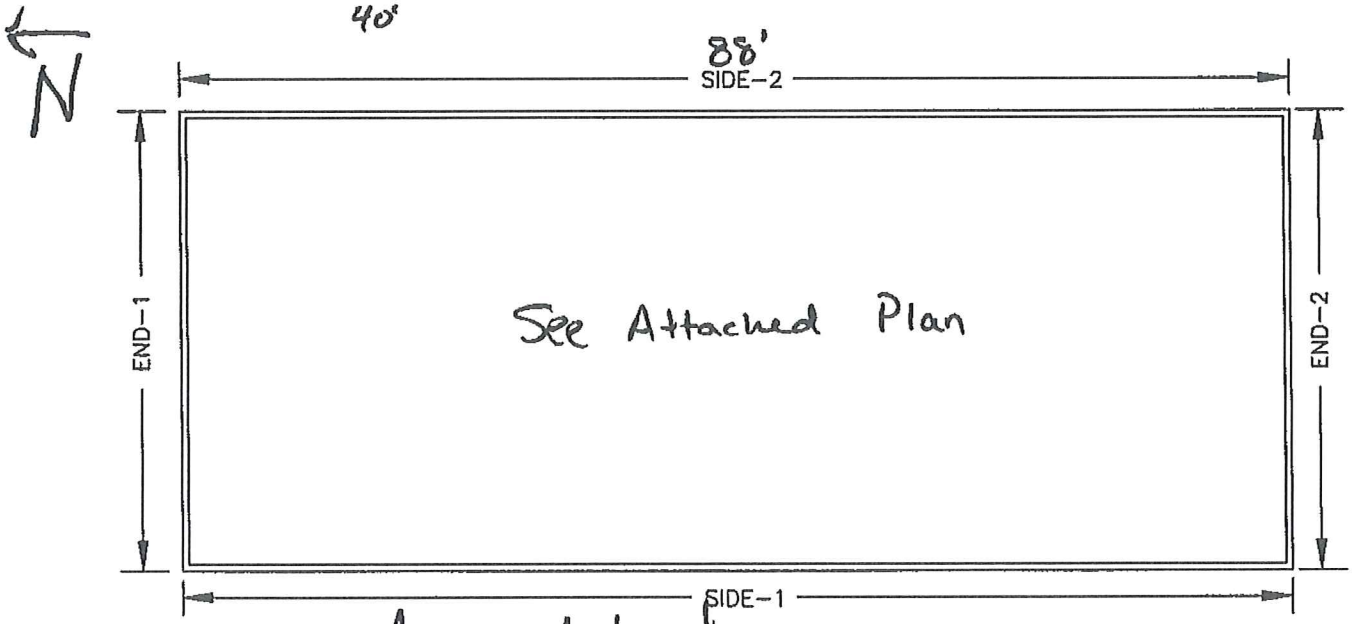

SPECIAL NOTES: Jason Nachtigal

(I.E.-DUTCH CRNRS, Y-BRACE, LINED & INSULATED)

REV. 01/01/17

Attachment: Conditional Use Application for 225 E 5th Ave (6339 : Conditional Use Application for 225 E Fifth Ave)

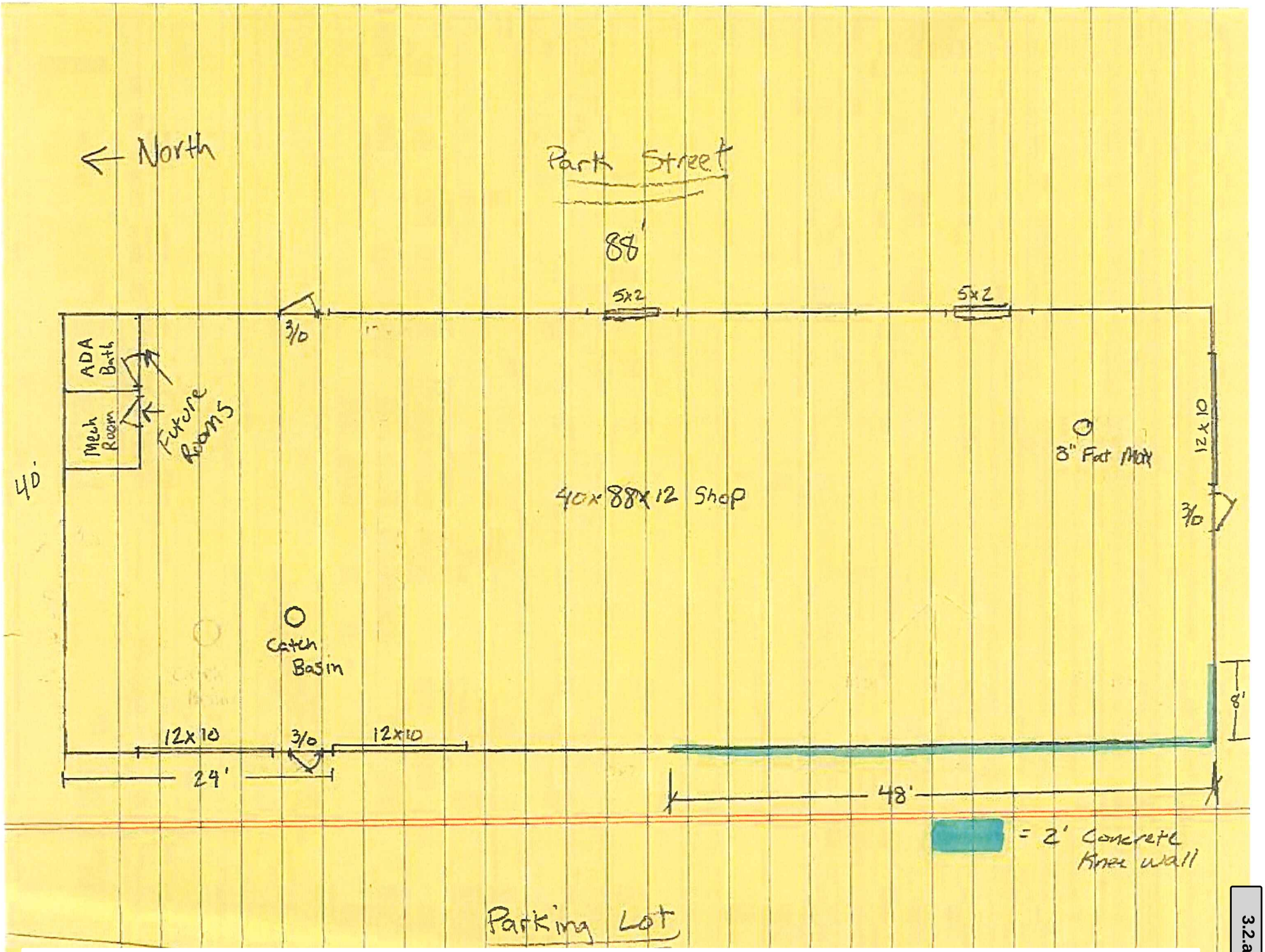
North
Park Street
88'
5x2
5x2
3/0
ADA Bath
Mech Room
Future Rooms
40'
40x88x12 Shop
8" Fat Max
12x10
3/0
Catch Basin
12x10
3/0
12x10
24'
48'
8'
= 2' Concrete Knee wall
Parking Lot

City of Antigo GIS

DISCLAIMER: The City of Antigo does not guarantee the accuracy of the material contained here in and is not responsible for any misuse or misrepresentation of this information or its derivatives.

SCALE: 1" = 20'

Antigo "Antigo Area on the go"

Print Date: 8/9/2023

Application for Zoning Amendment

CITY OF ANTIGO BUILDING INSPECTOR AND ZONING ADMINISTRATOR
700 EDISON STREET, ANTIGO, WISCONSIN 54409
PHONE: 715.623.3633 x134 Fax 715.627.7099
rmusolff@antigo-city.org

ALL INFORMATION MUST BE PRINTED AND LEGIBLE

If you are requesting a zoning amendment, please provide the following information. Note that a different application is required if you are requesting a conditional use. Should you have any questions about this form or the City's rezoning process, please call 715-623-3633 x134.

Petitioner's Name: CoVantage Credit Union
Petitioner's Address: 723 6th Ave Antigo WI 54409
Petitioner's Phone Number: 715-350-9660

Property Owner's Name: CoVantage Credit Union (Trevor McCarthy)
Property Owner's Address: 723 6th Ave Antigo WI 54409
Property Owner's Phone Number: 715-350-9660

Property Information:
Address: 722 7th Ave
Parcel ID Number: 201-0764
Legal Description: The north 48 ft of 15 and 16 of block 54 of the original plat of the City of Antigo
(The legal description may be obtained from the City Zoning Adminisstrator)

Existing zoning district classification(s) of the land included within the petition: R-4

Existing land use on land included in this application: A portion of a redisential lot

Proposed zoning district classification(s) of the land included within the petition: B-4

Propsed land use(s) following rezoning: Expanison of Covantage's lot for a generator location

Please provide a brief narrative justifying the rezoning of this property. (Attach an additional sheet if necessary.): The rezone will allow Covantage to combine this section of land with the Main property which is also zoned B-4. The rest of the lot will remain residential

Please attach a map of the area showing the parcel(s) proposed to be rezoned, adjacent streets, existing zoning on the parcels, and other information you feel might be helpful in evaluating your proposal.
(City Zoning Administrator may provide this information)

Please attach a list of Names and Addresses of all abutting and opposite property owners within 300 feet of the property to be altered
(City Zoning Administrator will provide this information)

If petitioner is NOT the property owner, a letter with the owner's signature shall need to be provided. The letter shall state that the owner is in agreement with the proposed zoning change contingent upon the sale of the property to the applicant.

Signature of Petitioner _____ Date 8/9/23

IF ADDITIONAL PAGES ARE NEEDED, PLEASE ATTACH HERETO

Pd 8/9/23 cc

Please return this completed form with the information indicated above and the fee of **$200** to the Building Inspector/Zoning Administrator Office located in Antigo City Hall, 700 Edison Street, Antigo WI. 54409.

Checks should be made payable to "City of Antigo".

The entire zoning ordinance is available on the City's website at: **http://www.antigo-city.org/**

Should you have any questions regarding this form or the City's rezoning process, please phone 715-623-3633 x134.

For City Use Only

Received by:_____ Date:_____

City Planning Commission / Public hearing:

Date: September 5, 2023 ☐ Approved ☐ Denied

Common Council / Public hearing:

Date:_____ ☐ Approved ☐ Denied

Ordinance number:_____

Notes:_____

Antigo
"Antigo Area on the go"
BUILDING INSPECTOR/ZONING ADMINISTRATOR
715-623-3633 ext134
FAX 715-627-7099

Memo

To: City Plan Commission

From: Beth McCarthy Building Inspector/Zoning Administrator

Date: 8/10/23

RE: Rezone a portion of parcel 2010764, (722 7th Avenue) from R-4 General Residence District to B-4 Central Business District to allow combination with adjoining property.

For your information:

1. The above parcel is in the process of being surveyed.

2. To change the zoning one of the following must be met
   a. 200 feet of frontage
   b. contains 25,000 square feet of area
   c. adjoins a lot or parcel of land which bears the same zoning district classification as the proposed zoning district

3. This property meet the criteria of the above subsection "c".

Attachment: Zoning Amendment Application for 722 7th Ave (6341 : Zoning Amendment Application for Portion of 722 7th Ave)

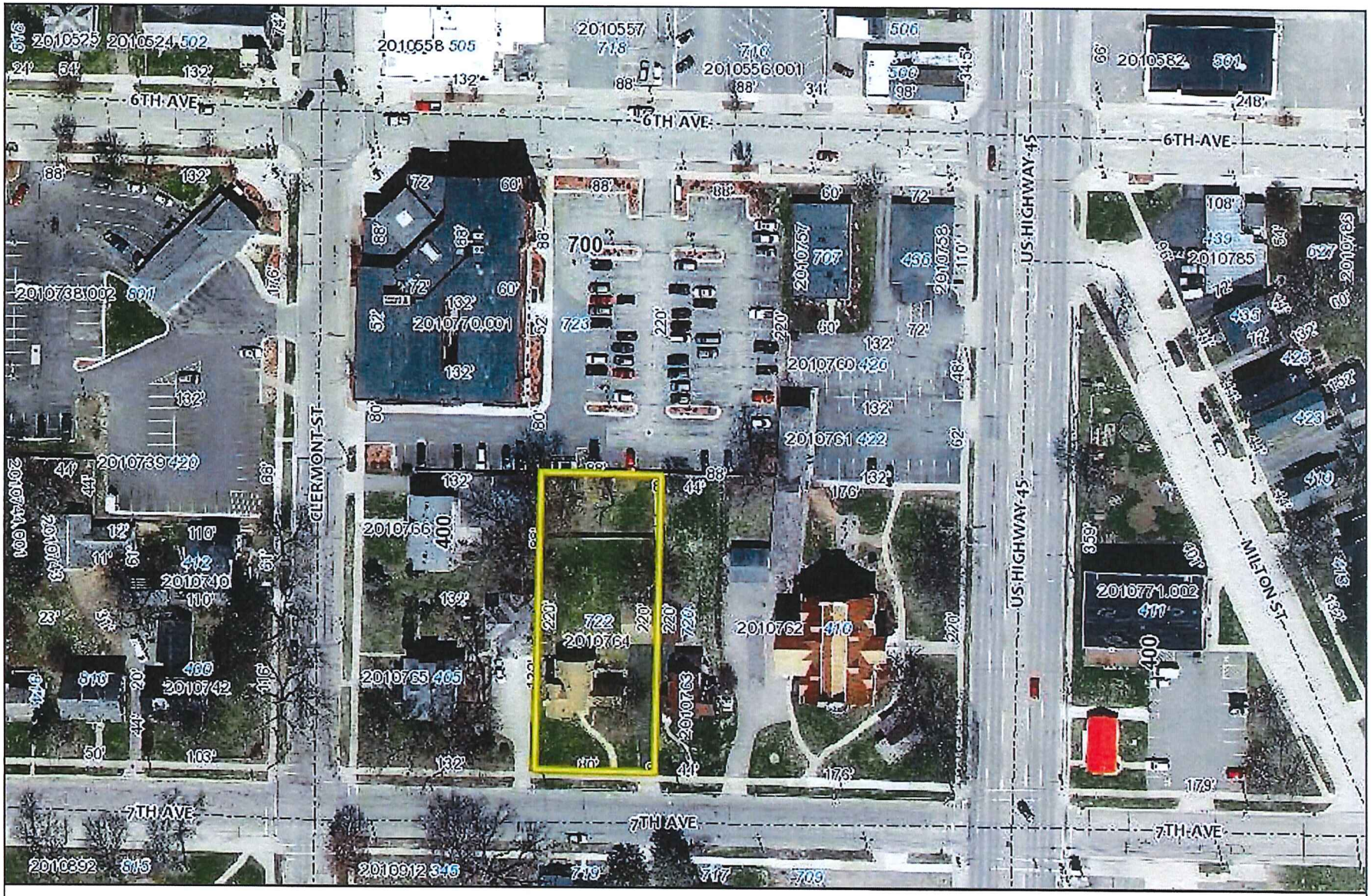

DISCLAIMER: This data is provided by the City of Antigo for informational purposes only. The City does not warrant or guarantee the accuracy or reliability of this data. The recipient of this data assumes any risk of its use for any purpose.

City of Antigo GIS

200 100 0 200

SCALE: 1" = 1,200'

Antigo "Antigo Area on the go"

Print Date: 8/10/2023

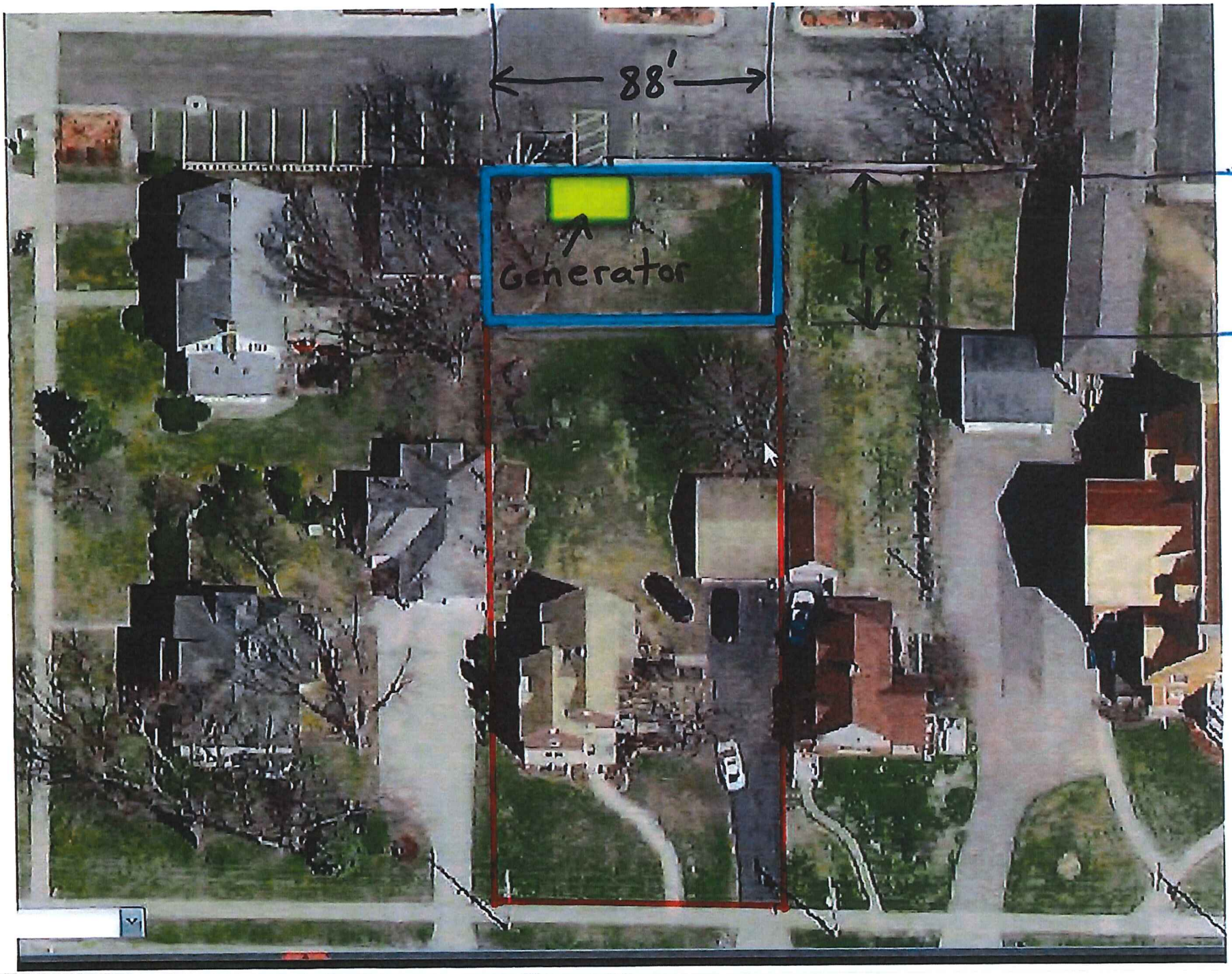
88'
48'
Generator

Application for Zoning Amendment

CITY OF ANTIGO BUILDING INSPECTOR AND ZONING ADMINISTRATOR
700 EDISON STREET, ANTIGO, WISCONSIN 54409
PHONE: 715.623.3633 x134 Fax 715.627.7099
bmccarthy@antigo-city.org

ALL INFORMATION MUST BE PRINTED AND LEGIBLE

If you are requesting a zoning amendment, please provide the following information. Note that a different application is required if you are requesting a conditional use. Should you have any questions about this form or the City's rezoning process, please call 715-623-3633 x134.

Petitioner's Name: CITY OF ANTIGO

Petitioner's Address: 700 EDISON STREET ANTIGO WI. 54409

Petitioner's Phone Number: (715) 623-3633

Property Owner's Name: : CITY OF ANTIGO
Property Owner's Address: 700 EDISON STREET ANTIGO WI 54409
Property Owner's Phone Number: (715) 623-3633
Property Information:
Address: N/A
Parcel ID Number: 2012801.073
Legal Description: _PT GOVT LOT 6 SEC 4 T30N R11E BEING THE S20 ACRES THEREOF EXC S20' OF W20' THEREOF (#300626) (OLD SEWER PLANT LAND) ALSO PT GOVT LOT 7 SEC 4 T30N R11E COM @ NE COR TH S165' W265' S TO CTR OF SPRI NGBROOK TH NW'RLY ALG SPRING BROOK TO N LN SD GOVT LOT TH E ON N LN SD GOVT LOT TO POB

Existing zoning district classification(s) of the land included within the petition: R-1

Existing land use on land included in this application: FARM LAND

Proposed zoning district classification(s) of the land included within the petition: I-2

Propsed land use(s) following rezoning: SOLAR FIELD TO HELP POWER WASTE WATER TREATMENT PLANT.

Please provide a brief narrative justifying the rezoning of this property. (Attach an additional sheet if necessary.): _____

Please attach a map of the area showing the parcel(s) proposed to be rezoned, adjacent streets, existing zoning on the parcels, and other information you feel might be helpful in evaluating your proposal.
(City Zoning Administrator may provide this information)

Please attach a list of Names and Addresses of all abutting and opposite property owners within 300 feet of the property to be altered
(City Zoning Administrator will provide this information)

Attachment: Zoning Amendment Application for Solar Field by Waste Water Treatment Plant for City Plan Mtg 9-5-2023 (6343 : Zoning

If petitioner is NOT the property owner, a letter with the owner's signature shall need to be provided. The letter shall state that the owner is in agreement with the proposed zoning change contingent upon the sale of the property to the applicant.

Signature of Petitioner

7-20-2023
Date

IF ADDITIONAL PAGES ARE NEEDED, PLEASE ATTACH HERETO

Please return this completed form with the information indicated above and the fee of **$200** to the Building Inspector/Zoning Administrator Office located in Antigo City Hall, 700 Edison Street, Antigo WI. 54409.

Checks should be made payable to "City of Antigo".

The entire zoning ordinance is available on the City's website at: **http://www.antigo-city.org/**

Should you have any questions regarding this form or the City's rezoning process, please phone 715-623-3633 x134.

For City Use Only

Received by:_____ Date:_____

City Planning Commission / Public hearing:

Date: September 5, 2023 ☐ Approved ☐ Denied

Common Council / Public hearing:

Date:_____ ☐ Approved ☐ Denied

Ordinance number:_____

Notes:_____

Antigo
"Antigo Area on the go"
BUILDING INSPECTOR/ZONING ADMINISTRATOR
715-623-3633 ext134
FAX 715-627-7099

Memo

To: Zoning Board of Appeals

From: Terry Kubiaczyk, Assistant Building Inspector/Zoning Administrator

Date: 8/09/2023

RE: Proposed Zoning change for parcel number 2012801.073 across the street from WWTP N2420 Koszarek RD (City Owned Property) To allow Zoning change from R-1 to I-2 to allow for a solar array across from sewer plant to power its building.

This is for your information:

- The current city owned property is not zoned properly to allow for the solar field.
- The solar array will consist of 3 acres of current field that is not being utilized.

Attachment: Zoning Amendment Application for Solar Field by Waste Water Treatment Plant for City Plan Mtg 9-5-2023 (6343 : Zoning

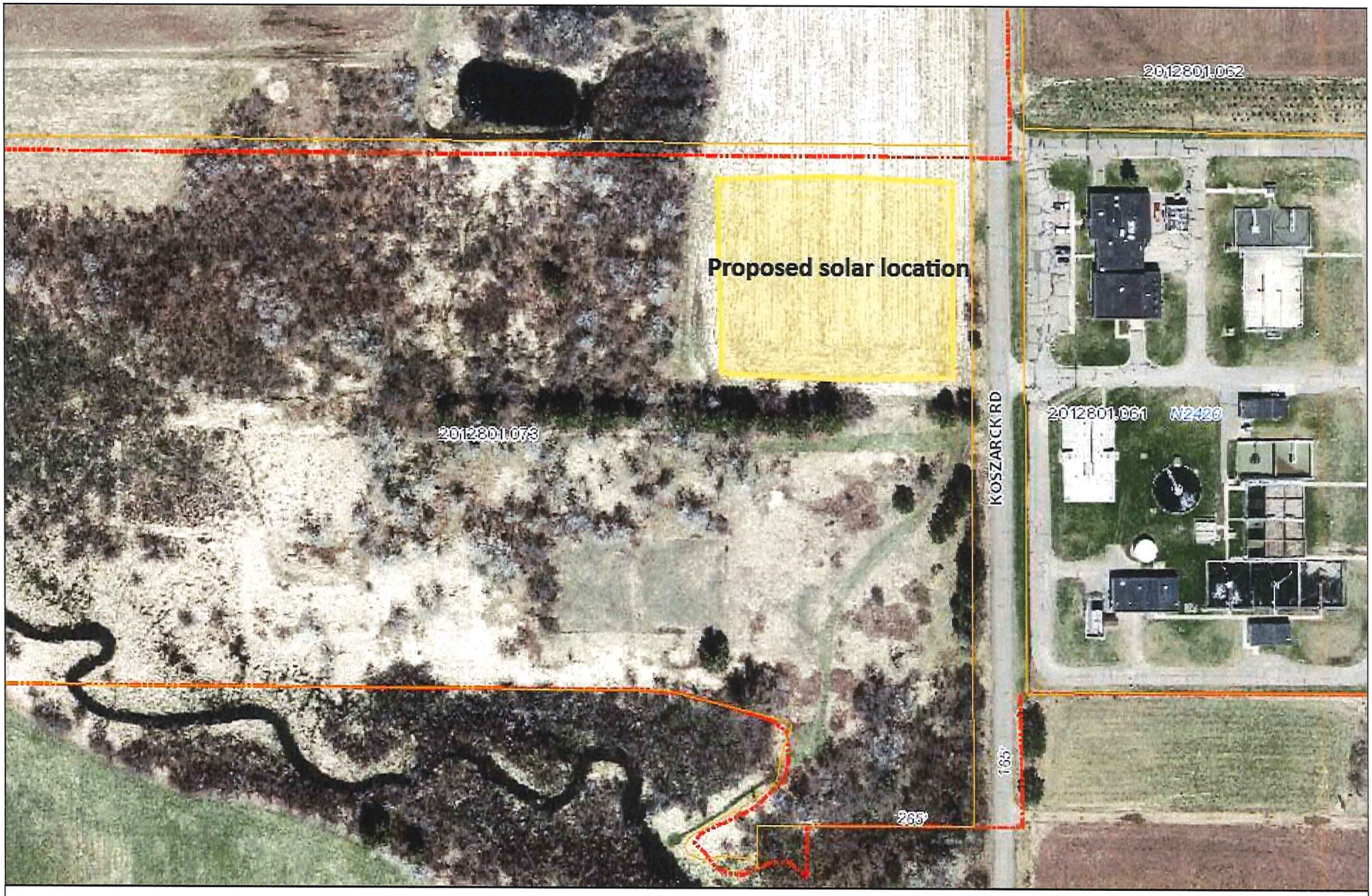

DISCLAIMER: This data is provided by the City of Antigo for informational purposes only. The City does not warrant or guarantee the accuracy or reliability of this data. The recipient of this data assumes any risk of its use for any purpose.

City of Antigo GIS

333 167 0 333

SCALE: 1" = 2,000 '

Antigo
"Antigo Area on the go"

Print Date: 7/19/2023

Antigo
"Antigo Area on the go"

To: Mayor and City Council

From: Beth McCarthy, Building Inspector/Zoning Administrator

Date: September 05, 2023

Re: Approve Sale of Vacant Lot Located at 711 Watson Street

Through the tax lien process, the City recently acquired the vacant lot located at 711 Watson Street (Parcel 201-0337). This property is zoned R-3 Residential and remains a buildable lot with an assessed value of $7,100 and a fair market value of $8,065. I recommend a minimum bid of $6,000 be set by the Commission.

It is also my recommendation that the City request bids on this property as is and to have those bids be returned before December 5th, 2023. As part of the bidding process I believe the City should only accept bids for the entire parcel and the bidders must state intended use.

City of Antigo GIS

DISCLAIMER: The City of Antigo does not guarantee the accuracy of the material contained here in and is not responsible for any misuse or misrepresentation of this information or its derivatives.

SCALE: 1" = 20'

Antigo
"Antigo Area on the go"

Print Date: 8/9/2023

Attachment: Map of 711 Watson St (6321 : Approve sale of vacant lot located at 711 Watson Street)