CITY OF ANTIGO

PUBLIC WORKS COMMITTEE MEETING

COUNCIL CHAMBERS	Wednesday, July 23, 2025
CITY HALL, 700 EDISON STREET	5:30 PM

Call to Order

Minutes Approval

1. Approve Minutes from the June 25, 2025 Meeting

Discussion and Action May Occur on Any of the Following Agenda Items:

1. Bid from Energenecs in the Amount of $59,800 to Replace the Water Plant Lime Silos Using Budgeted CIP Funds and Waiving the Bidding Process
2. Start Process of Request for Proposals for Wastewater Treatment Plant Study
3. Traffic Counter Results
4. Possibility of Naming a Street After D. Wayne Lukas (Referred by Alderperson Bugni)
5. Possibility of Naming a Street After Former Mayor Michael Monson (Referred by Alderperson Wagner)

Any Other Matters Authorized by Law to be Considered

Adjournment

Upon reasonable notice, efforts will be made to accommodate disabled individuals through appropriate aids and services. For additional information, contact clerk treasurer's office, 700 Edison Street, Antigo, Wisconsin 54409. (715) 623-3633 extension 100. Members of and possibly a quorum of members of other governmental bodies may be in attendance to gather information. Any governmental body other than that specifically referred to above will take no action.

DATE MAILED: July 17,2025 SCOTT HENRICKS

Antigo
"Antigo Area on the go"

To: Mayor and City Council

From: Tommy Horswill, Project Manager

Date: July 23, 2025

Re: Bid from Energenecs in the Amount of $59,800 to Replace the Water Plant Lime Silos Using Budgeted CIP Funds and Waiving the Bidding Process

Earlier this year, the dust collector on lime silo 2 (Lime is used to soften the water) at the drinking water plant was damaged beyond repair. After some searching through companies, I called Staab Construction, who was the contractor who installed the silo. With assistance from Energenecs, a proposal of $29,900 was provided, which includes freight and installation.

There are two silos and two dust collectors on site at the water plant. The plant is currently running off of the one silo. As the other dust collector is the same age, I would like to replace both before there are nonfunctioning dust collectors.

There is $100,000 budgeted in the CIP fund in 2025 for lime silo upgrades. The cost of replacing both dust collectors would be $59,800.

I am asking the committee to:

1. Waive the normal bidding process, as the lack of redundancy should be considered an emergency.

2. Accept the proposal from Energenecs for replacing both dust collectors for a cost of $59,800.

Energenecs

Proposal

DATE: June 26, 2025

PROJECT: Lime Silo Dust Collection – Antigo, WI

TO: Tommy Horswill – Infrastructure Alternatives

Energenecs is pleased to offer the following firm price proposal for this project.

Specifically includes:

<u>One (1) Merrick Silo Dust Collector</u>

- Flange Mounted, Open Bottom
- Filter Housing
  - Round Body, 304 Stainless Steel
  - Fourteen (14) Screw-In Non-Woven Polyester and Nanofiber Filter Cartridges
  - 236 ft^2 filter area
- Air Pulse Jet Self Cleaning System
  - Four solenoid valves, 110V/1ph/60hz
- One (1) Hinged Access Door for bag removal
- Blower Assembly
  - 5HP, 3,500rpm 460V/3ph/60hz, TEFC motor
  - Carbon steel fan blade
  - Top-mounted
- Includes labor and lifting equipment by Staab Construction to remove existing damaged dust collector and install the new dust collector. Estimated time on site is 1 day.

Notes:

- Existing 110V and 460V electrical connections to be reused.
- The dust collector manufacturer recommends that the top-mounted fan remain installed on the existing dust collector, as it provides suction to more efficiently remove dust from the silo and collect them in the filter. The site currently leaves the fans off of the dust collectors since they are difficult to when the filters are replaced every six months.
- The proposed dust collector includes an access door in the shroud that allows the filter bags to be replaced without removing the fan motor and the shroud. See the sketch included below.

Attachment: Antigo - Lime Silo Dust Collection Proposal 6-26-25 (7618 : Water Plant Lime Silos Replacement)

Rev 1 700 EAST MILAN DRIVE, SAUKVILLE, WISCONSIN 53080 | PH: 262-377-6360 | WWW.ENERGENECS.COM

Energenecs

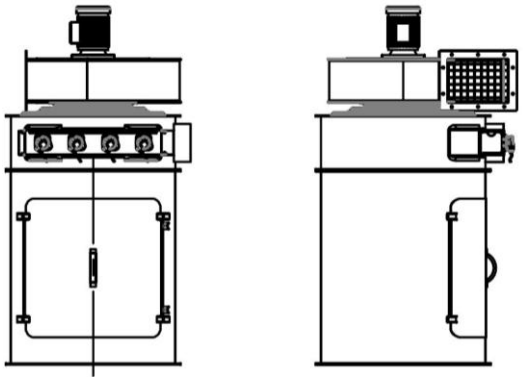

Proposal Includes
- Submittal drawing for approval, freight to the site, O&M manual.

Proposal Excludes
- Taxes or fees of any kind
- State/Federal Prevailing Wages, performance and payment Bonds.
- Any items not specifically listed in this proposal.

Price
- Total $29,900
- All applicable taxes will be added to the above price.
- Energenecs terms and conditions apply.

Schedule
- Submittals: 2 Weeks from Order
- Delivery: 8-9 Weeks from Approval.

Warranty
- 12 Months from start-up or 18 months from delivery, whichever occurs first.

Submitted by:

Kevin LaPean, PE 262.339.0447

Attachment: Antigo - Lime Silo Dust Collection Proposal 6-26-25 (7618 : Water Plant Lime Silos Replacement)

Energenecs

Terms & Conditions

PURCHASE ORDER FORMS
Orders submitted on BUYER'S purchase order forms will be accepted only with the express understanding that no statements, clauses or conditions contained in said order form will be binding on the SELLER if they in any way modify the SELLERS Terms & Conditions of sale.

PRICES
All prices are F.O.B. factory unless expressly stated otherwise. Prices DO NOT include sales, excise, municipal, state or other government taxes.

ACCEPTANCE
Acceptance of a quotation, whether by a separate purchase order or by other means, shall constitute an acknowledgment of the quotation as written and an acceptance of the Terms & Conditions hereof.

CREDIT APPROVAL
The credit terms specified on the face hereof are subject to SELLERS continuing approval of BUYERS credit and if, in SELLERS sole judgment, BUYERS credit or financial standing is so impaired as to cause SELLER in good faith to deem itself insecure, SELLER may withdraw the extension of credit and require other payment terms.

FORCE MAJEURE
Seller will not be liable for failure to deliver or perform, for any delay in the performance of orders or contracts, or in the delivery or shipment of goods, or for any damages suffered by the BUYER by reason of such delay or failure, when such delay or failure is, directly or indirectly, caused by, or in any manner arises from delays of suppliers or carriers or any other cause or causes beyond SELLER'S control.

PAYMENT
95% payment due on shipment of equipment to job site. 5% due on acceptance of the system. Net 30 days on all invoices. 95% payment must be received before start up can be authorized. Any balance owed by BUYER is subject to a 1.5% per month delinquency charge until paid. FIELD STARTUP SERVICE CANNOT BE AUTHORIZED WITHOUT 95% PAYMENT BEING REMITTED TO SELLER IN ADVANCE OF PERFORMING START UP SERVICES. If no startup is required, 100% payment is due net 30 days from invoice date. BUYERS PAYMENT OBLIGATION IS IN NO WAY CONTINGENT UPON BUYERS RECEIPT OF PAYMENT FROM ANY OTHER PARTY. In addition to all other amounts due hereunder, BUYER shall reimburse SELLER in full for all collection costs or charges, including reasonable attorney fees, which SELLER may incur with respect to the collection of past due amounts from BUYER, including interest on overdue accounts. If BUYER is in default under this or any other agreement with SELLER, SELLER may, at their option, defer performance hereunder until such default is cured. SELLER shall have no obligation to provide factory startup assistance and/or factory training until all invoices (including retentions) for equipment have been paid in full.

WARRANTY
SELLER is a system integrator/manufacturer's representative and, as such, our product guaranty(s) and warranty(s) is set forth in the manufacturer's instruction book or operation and maintenance manual that accompanies each product. SELLER does not offer its customers any warranty or guarantee that would impose upon SELLER greater obligations than those imposed by the manufacturers we represent.

SELLER shall not be liable for any incidental or consequential loss, damage or expense arising directly or indirectly from the use of the product. SELLER shall not be liable for any damages or charges for labor or expense in making repairs or adjustments to the product within the warranty period without prior written approval of SELLER. SELLER shall not be liable for any damages or charges sustained in the adaptation or use of its engineering data or services.

Attachment: Antigo - Lime Silo Dust Collection Proposal 6-26-25 (7618 : Water Plant Lime Silos Replacement)

Rev 1 700 EAST MILAN DRIVE, SAUKVILLE, WISCONSIN 53080 | PH: 262-377-6360 | WWW.ENERGENECS.COM

Energenecs

SELLER makes no warranties, expressed or implied, except as set forth in such standard Terms & Conditions of sale in this agreement. No claims of any kind shall be greater in amount than the purchase price of the SELLER'S products in respect of which such claims are made. SELLER is not liable in any event hereunder for any consequential, incidental or liquidated damages or penalties. IN ANY CASE SELLER SHALL NOT BE LIABLE FOR FIELD WORK BY STAFF OTHER THAN THE SELLER UNLESS EXPRESSLY AUTHORIZED IN WRITING, IN ADVANCE, BY THE SELLER. THIS IS IN SPECIFIC REGARD TO BACK CHARGES.

BUYER agrees to reimburse SELLER for ALL expenses incurred in servicing a warranty request if the cause of the warranty request is determined to be other than a manufacturer's defect or failure of a SELLER supplied component.

CLAIM PERIODS

All goods are shipped at the risk of the buyer after they have been delivered by SELLER to the carrier. BUYER shall immediately inspect said equipment upon receipt of equipment and any damage must be noted on the freight carriers bill of lading at time of receipt. SELLER is not liable for any shortages or non-conformance unless notified thereof by BUYER within 10 days after BUYERS receipt of said equipment.

CHANGES, CANCELLATIONS, RETURNS

All requests for changes, cancellations and/or returns must have prior written approval and are conditional on manufacturers cancellation/return policies and subject to a restocking and/or service charge for order handling, inspection, reconditioning and repackaging, as required. Authorized returned goods must be packaged and shipped prepaid to manufacturer. Products more than six (6) months old cannot be returned for credit. Terms and conditions stated herein shall also govern and be binding to all BUYER requested/approved change orders.

SELLER shall retain a security interest in the equipment until the full purchase price has been paid. BUYER'S failure to pay any amounts when due shall give SELLER the right to possession and removal of the equipment at any time upon giving at least ten (10) days prior written notice. SELLER'S taking of such possession shall be without prejudice to any other remedies SELLER may have. Title to the equipment shall transfer to the BUYER upon shipment from SELLER.

SUBMITTAL DRAWINGS & OPERATION/MAINTENANCE MANUALS

Submittal drawings and operation & maintenance documentation is provided in accordance with plan documents.

THE SELLER RESERVES THE RIGHT TO REVIEW AND REVISE THIS PROPOSAL AFTER THIRTY DAYS FROM ISSUANCE.

By: Energenecs, Inc. Kevin LaPean, PE

I accept this proposal and all terms thereof:

Accepted: _____

Title: _____

Date: _____ PO #: _____

Rev 1 700 EAST MILAN DRIVE, SAUKVILLE, WISCONSIN 53080 | PH: 262-377-6360 | WWW.ENERGENECS.COM

Attachment: Antigo - Lime Silo Dust Collection Proposal 6-26-25 (7618 : Water Plant Lime Silos Replacement)